YORK®

INSTALL CONFIDENCE

YAH SERIES FAN COIL UNITS

Johnson Controls

Johnson Controls' YORK® YAH Ceiling Mounted Cabinet Fan Coil Unit

YAH Series Fan Coil Units

Johnson Controls' YORK® YAH ceiling mounted cabinet fan coil units are terminal points of central air-conditioning systems. They are designed for fresh air units or to cool, heat, humidify and de-humidify, filter and clean the air, etc.
The conditioned air can be delivered to locations across various distances via specially designed ducts. The units are especially suitable for the air-conditioning of commercial buildings and industry applications.

YORK® YAH series fan coil units have 10 different models. The cooling capacity ranges from 7.8kW to 240.4kW, and air flow from 1500m³/h to 15000m³/h. Rated external total pressure ranges from 180 to 340 Pa. More external total pressure can be provided for flexible application.

Each unit is made from galvanized steel with 10mm thick polyethylene inner insulation. It contains a built-in cooling coil and fan, and externally mounted nylon air filters.

Cooling and heating coil use copper tubes with corrugated fins. The fan, motor and belt pulley are all high-quality products producing stable and efficient performance. The fan is a forward curved centrifugal model that works on double air inlets. The motor features IP55 and a type F insulation with self-lubricating bearings, and standard motor efficiency reaches to IE3 class(IEC60034-30).
The externally mounted filter can be withdrawn from side or bottom.

Features

- Easy installation
- Lower unit height for low floor ceiling application
- Low noise
- Filter can be withdrawn from side or bottom

Nomenclature & Features

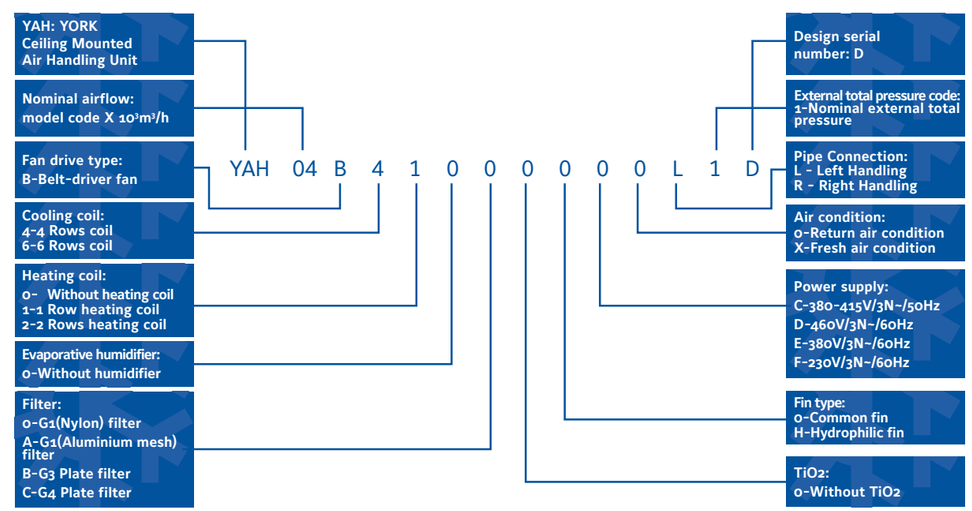

YAH Series Fan Coil Units - Main Technical Data

MODEL	YAH	1.5		02		03		04		05		06		08		10		12		15	
COIL DEPTH	Row	4	6	4	6	4	6	4	6	4	6	4	6	4	6	4	6	4	6	4	6
"Return Air Condition Nominal Cooling Capacity"	ton	2.2	3.2	3.2	4.2	4.9	6.3	6.3	8.7	7.7	10.9	9.6	12.3	13.1	17.0	16.5	22.0	20.4	24.9	26.4	32.2
	MBH	26.5	38.6	38.2	50.2	58.2	75.4	75.3	103.9	92.0	131.0	114.9	147.2	157.5	203.8	197.7	263.7	244.4	299.0	316.9	386.3
	kW	7.8	11.3	11.2	14.7	17.1	22.1	22.1	30.5	27.0	38.4	33.7	43.1	46.2	59.7	57.9	77.3	71.6	87.6	92.9	113.2
"Return Air Condition Nominal Heating Capacity"	ton	3.8	4.7	5.0	6.1	7.8	9.5	10.6	13.1	13.3	16.4	16.5	18.0	23.5	26.9	28.9	33.8	35.6	40.0	44.9	50.4
	MBH	46.1	56.6	60.4	73.0	93.5	113.6	127.6	157.0	160.0	197.2	198.2	215.7	281.5	322.8	346.3	405.1	426.9	480.1	538.4	604.7
	kW	13.5	16.6	17.7	21.4	27.4	33.3	37.4	46.0	46.9	57.8	58.1	63.2	82.5	94.6	101.5	118.7	125.1	140.7	157.8	177.2
"Fresh Air Condition Nominal Cooling Capacity"	ton	5.3	7.0	7.0	9.2	10.4	13.7	14.6	18.9	18.2	23.3	19.8	28.9	27.8	39.1	35.6	49.3	42.2	57.7	55.1	73.4
	MBH	64.2	83.9	84.3	109.9	124.9	164.1	175.7	226.9	218.7	279.1	237.8	347.4	334.0	468.9	427.2	591.4	506.4	692.4	661.3	880.4
	kW	18.8	24.6	24.7	32.2	36.6	48.1	51.5	66.5	64.1	81.8	69.7	101.8	97.9	137.4	125.2	173.3	148.4	202.9	193.8	258.0
"Fresh Air Condition Nominal Heating Capacity"	ton	5.5	6.5	7.1	8.5	11.7	13.3	14.1	16.2	17.2	19.8	19.6	24.3	30.3	37.0	39.6	46.0	46.5	54.4	58.9	68.4
	MBH	65.9	78.5	85.0	101.7	139.9	159.7	168.9	194.5	206.4	237.5	235.8	291.4	363.0	444.0	475.3	552.5	557.9	652.8	706.3	820.4
	kW	19.3	23.0	24.9	29.8	41.0	46.8	49.5	57.0	60.5	69.6	69.1	85.4	106.4	130.1	139.3	161.9	163.5	191.3	207.0	240.4
FAN MOTOR																					
Type / Drive		Centrifugal DWDI Forward Curve / Belt Driven																			
Size		7/7 (1)		7/7 (1)		7/7 (2)		7/7 (2)		9/7 (2)		9/7 (2)		9/9 (2)		15/15 (1)		15/11 (2)		15/11 (2)	
Nominal Airflow	CFM (m3/h)	883(1500)		1177(2000)		1766(3000)		2354(4000)		2943(5000)		3531(6000)		4709(8000)		5886(10000)		7063(12000)		8829(15000)	
Design Ext. Static Pressure	in.WG (Pa)	0.4(100)																			
Designed Nominal Fan Speed	RPM	1324	1469	1369	1487	1419	1568	1450	1597	1192	1267	1294	1364	1240	1304	791	849	708	772	747	809
Design Motor Size	HP (kW)	0.75(0.55)	0.75(0.55)	0.75(0.55)	0.75(0.55)	1(0.75)	1(0.75)	1.5(1.1)	1.5(1.1)	2(1.5)	2(1.5)	3(2.2)	3(2.2)	3(2.2)	4(3)	3(2.2)	4(3)	3(2.2)	4(3)	4(3)	5.5(4)
Max. Running Amp for Operating Motor @ 50Hz, 415V	A	1.26		1.26		1.69		2.39		3.18		4.36		4.36	5.80	4.36	5.80	4.36	5.80	5.80	7.66
MAXIMUM OPERATING @ NOMINAL AIR FLOW																					
Max. Ext. Static Pressure	in.WG (Pa)	2.07(516)	1.85(461)	1.49(372)	1.29(322)	1.86(463)	1.64(408)	0.60 (150)	0.40 (100)	0.70 (175)	0.50 (125)	0.70 (175)	0.50 (125)	0.70 (175)	0.50 (125)	1.70 (425)	1.60 (400)	0.70 (175)	0.50 (125)	1.70 (425)	1.60 (400)
Max. Operating Fan Speed	RPM	2160		1952		2199		1980		1713		1816		1799		1183		1112		1124	
Max. Operating Motor Size	HP (kW)	1.00 (0.75)		1.00 (0.75)		2.00 (1.50)		2.00 (1.50)		3.00 (2.20)		4.00 (3.00)		5.50 (4.00)		5.50 (4.00)		5.50 (4.00)		7.50 (5.50)	
Max. Running Amp for Operating Motor @ 50Hz, 415V	A	1.69		1.69		3.18		3.18		4.36		5.80		7.66		7.66		7.66		10.3	
COIL		3/8"														1/2"					
Type		Seamless Copper Tube / Corrugated Aluminum Fin																			
Tube Thickness / Fin Thickness	mm / mm	0.30 / 0.115														0.34/0.115					
Face Area	ft2 (m2)	1.64(0.15)		2.25(0.21)		3.28(0.3)		4.43(0.41)		5.47(0.51)		6.56(0.61)		8.75(0.81)		10.77(1)		12.82(1.19)		16.06(1.49)	
Coil Static Resistance	in.WG (Pa)	0.54 (135)	0.76 (190)	0.56 (140)	0.76 (190)	0.58 (145)	0.8 (200)	0.58 (145)	0.8 (200)	0.6 (150)	0.82 (205)	0.6 (150)	0.82 (205)	0.6 (150)	0.84 (210)	0.56 (140)	0.8 (200)	0.58 (145)	0.8 (200)	0.58 (145)	0.82 (205)
Return Condition Fin Per Inch	FPI	13						12				13						12			
Fresh Air Condition Fin Per Inch	FPI	10																			
Return Condition Water Flow Rate	USgpm	5.30	7.70	7.50	10.00	11.60	14.90	15.10	20.80	18.40	26.30	23.10	29.20	31.10	40.90	39.00	52.70	48.60	60.10	62.70	76.20
	l/s	0.33	0.49	0.48	0.63	0.73	0.94	0.95	1.31	1.16	1.66	1.46	1.84	1.97	2.58	2.46	3.33	3.07	3.79	3.96	4.81
Fresh Air Condition Water Flow Rate	USgpm	12.80	16.50	16.70	21.90	24.70	32.60	35.30	45.50	43.40	56.00	47.10	69.30	66.30	93.60	85.50	117.90	101.10	137.90	130.80	176.60
	l/s	0.81	1.04	1.05	1.38	1.56	2.06	2.22	2.87	2.74	3.53	2.97	4.37	4.18	5.90	5.39	7.44	6.38	8.70	8.26	11.14
Return Condition Water Pressure Drop	ft.WG	4.50	12.70	8.90	7.50	22.70	16.10	8.60	20.50	7.80	20.20	12.30	10.70	23.90	17.00	13.10	10.40	7.20	5.30	13.40	9.30
	kPa	13.50	38.00	26.70	22.30	67.90	48.20	25.70	61.40	23.20	60.50	36.70	31.90	71.40	50.70	39.10	31.20	21.60	15.70	40.10	27.70
Fresh Air condition Water Pressure Drop	ft.WG	14.80	12.90	17.90	12.70	22.30	18.80	31.20	26.50	39.10	29.50	7.40	40.90	12.20	63.10	3.60	15.50	5.30	23.70	9.70	43.80
	kPa	44.20	38.60	53.50	37.90	66.60	56.20	93.10	79.20	117.00	88.10	22.10	122.40	36.60	188.60	10.90	46.20	15.80	70.70	29.00	130.80
Header Type		Black Steel Pipe (BSPT Male Threaded)																			
Return Condition Nominal Header Size	in	1"	1"	1"	1"	1"	1-1/2"	1-1/2"	1-1/2"	1-1/2"	1-1/2"	1-1/2"	2"	1-1/2"	2"	2"	2-1/2"	2"	2-1/2"	2"	2-1/2"
Fresh Air Condition Nominal Header Size	in	1"	1"	1"	1-1/2"	1-1/2"	1-1/2"	1-1/2"	1-1/2"	1-1/2"	2"	2"	2"	2"	2"	2-1/2"	3"	2-1/2"	3"	2-1/2"	3"
CASING																					
Casing and Insulation		Galvanized Steel c/w 10mm Polyethylene (PE) Foam																			
DRAIN PAN																					
Material and Finishing		Galvanized Steel c/w Epoxy Polyester Powder Coating																			
Connection		1-1/4" O.D. Steel Pipe (BSPT Male Threaded)																			
FILTER																					
Filter Type		Nominal 1" Washable Nylon Filter																			
Qty / Unit		1		1		2		2		2		2		3		2		3		3	
Nominal Size	in	12*28		12*31		12*24		12*29		16*27		16*32		16*28		24*34		24*26		24*33	
Actual Size	mm	303*707		303*792		303*608		303*728		394*678		394*803		394*701		622*853		622*668		622*826	
OVERALL DIMENSION																					
Height	in (mm)	16.4(417)		16.4(417)		16.4(417)		16.4(417)		20(508)		20(508)		20(508)		29(736)		29(736)		29(736)	
Width	in (mm)	33.5(850)		36.8(935)		53.5(1360)		63(1600)		59.1(1500)		68.9(1750)		88.6(2250)		72.8(1850)		84.6(2150)		103.3(2625)	
Depth	in (mm)	33.9(860)		33.9(860)		33.9(860)		33.9(860)		37(940)		37(940)		38.6(980)		43.3(1100)		45.3(1150)		46.1(1170)	
PACKING DIMENSION																					
Height	in (mm)	24.7(627)		24.7(627)		24.7(627)		24.7(627)		28.3(718)		28.3(718)		28.3(718)		37.2(946)		37.2(946)		37.2(946)	
Width	in (mm)	42.1(1070)		45.5(1155)		62.2(1580)		71.7(1820)		67.7(1720)		77.6(1970)		97.2(2470)		81.5(2070)		93.3(2370)		112(2845)	
Depth	in (mm)	44.5(1130)		44.5(1130)		44.5(1130)		44.5(1130)		47.6(1210)		47.6(1210)		49.2(1250)		53.9(1370)		55.9(1420)		58.7(1490)	
Estimated Shipping Weight	kg	90	94	97	103	132	140	155	165	171	183	193	208	237	256	264	292	321	355	377	419

1. The weight listed in the table is the shipping weight. The operation weight of unit is about 20% more than the shipping weight.

2. Standard return air cooling conditions: air inlet at 80°F (26.7°) DB / 67°F (19.4°C) WB; chilled water inlet/outlet at 44°F (6.7°C) / 54°F (12.2°C).

3. Standard return air heating conditions:air inlet at 21°CDB; hot water inlet/outlet at 60°C/50°C.

4. Cooling conditions of fresh air unit: air inlet at 95°F (35°C) DB/ 83°F (28.3°C) WB; chilled water inlet/outlet at 44°F (6.7°C) / 54°F (12.2°C).

5. Heating conditions of fresh air unit: air inlet at 7°C DB; hot water inlet/outlet at 60°C/50°C.

6. External total pressure: the sum of velocity pressure and static pressure at the air discharge outlet (exclude the pressure drop across the unit)

7. For four-piped unit, heating coil is in the front of the cooling coil in the direction of air flow.

8. If the unit has split coil (cooling+heating) option, the external total pressure should be deducted by the responding air drop pressure

*** The unit performance is based on 5m altitude, the variance of altitude will affect the unit performance**

Altitude Correction Factors

Altitude(m)	300	900	1200	1500	1800
Total heat	0.99	0.97	0.96	0.94	0.93
Sensible heat	0.96	0.90	0.96	0.83	0.80

Note: The above is only for reference. Please contact our local office for detailed data.

Specifications

Electric Wiring Diagrams

Electric Connection:

1. The direct start schematic diagram (Fig.1) is for motor up to 5.5kW. The Y-Δ start schematic (Fig.2) for motors more than 7.5kW.

2. The dashed lines is provided by customer and it should be connected according to Fig.1 or Fig.2. Please ensure that all connections are tightened.

3. All electric connections should comply with local electric installation codes.

4. The ground terminal of the unit must be connected to the ground terminal in the control panel.

5. Customer should connect the power and control devices and supply short-circuit and over heat protection.

Each unit is made from galvanized steel with 10mm thick polyethylene inner insulation. It contains a built-in cooling coil and fan, and externally mounted nylon air filters.

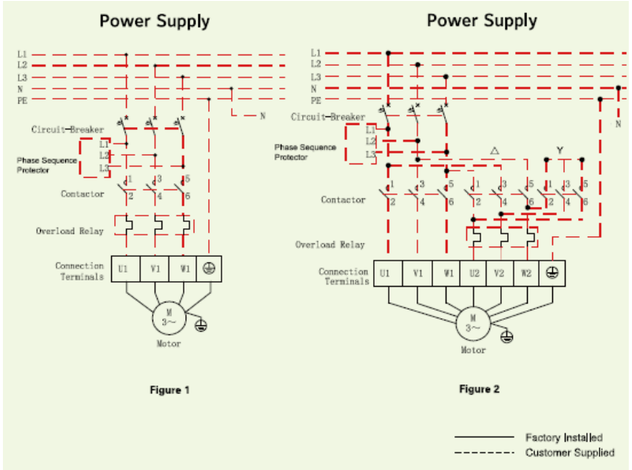

Notes for Placing Orders

1. The motor power is 380-415V/3N-/50Hz, 460V/3N-/60Hz, 380V/3N-/60Hz or 230V/3N-/60Hz, 4 wires.

2. The unit is equipped with plate type pre-filters at the return air intake.

3. When placing an order, the pipe direction (left connection or right) should be noted (note: facing the return air intake, it is the right if the inlet/outlet water pipes are on the right side of unit and vice versa).

4. The airflow rate and total pressure should be noted when placing an order.

5. If starter is required, it should be noted when placing an order (an option).

Physical Data

Model	"Air-flow m³/h"	L	W	H	Supply air flange size					Piping position						Return air flange size			Coil piping (Connection diameter)			
											K								R			
		A	B	C	D	E	F	G	H	J	Return air 4 Rows	Fresh air 4 Rows	6 Rows	L	M	N	P	Q	Return air 4 Rows	Return air 6 Rows	Fresh air 4 Rows	Fresh air 6 Rows
YAH1.5B	1500	860	850	417	410	259	228	-	73	53	66	66	110	400	144	319	710	320	Ø34	Ø34	Ø34	Ø34
YAH02B	2000	860	935	417	410	259	228	-	73	53	66	66	110	400	144	319	795	320	Ø34	Ø34	Ø34	Ø48
YAH03B	3000	860	1360	417	470	259	228	184	73	53	66	66	110	400	144	319	1220	320	Ø34	Ø48	Ø48	Ø48
YAH04B	4000	860	1600	417	520	259	228	184	73	53	66	66	110	400	144	319	1460	320	Ø48	Ø48	Ø48	Ø48
YAH05B	5000	940	1500	508	580	232	262	184	107	63	66	66	110	400	144	420	1360	411	Ø48	Ø48	Ø48	Ø60
YAH06B	6000	940	1750	508	551	232	262	184	107	63	66	88	110	400	144	420	1610	411	Ø48	Ø60	Ø60	Ø60
YAH08B	8000	980	2250	508	705	298	262	244	107	63	66	88	110	400	144	420	2110	411	Ø48	Ø60	Ø60	Ø60
YAH10B	10000	1100	1850	736	690	471	404	-	112	77	83	110	138	441	145	641	1710	639	Ø60	Ø76	Ø76	Ø89
YAH12B	12000	1150	2150	736	690	373	404	294	112	77	83	110	138	441	145	641	2010	639	Ø60	Ø76	Ø76	Ø89
YAH15B	15000	1170	2625	736	793	373	40	294	112	77	83	110	138	441	145	641	2485	639	Ø60	Ø76	Ø76	Ø89

Notes

1. When G is"-", the unit has only one air supply duct connection.

2. The coil pipe connections use male threads(BSPT) the corresponding imperial diameters are: 34mm---1" 42mm---1-1/4" 48mm---1-1/2"60mm---2" 76mm---2-1/2" 89mm---3"

3. The condensate pipe connections use 34mm O.D. male threads(BSPT).

4. All dimensions are SI unit(mm).

Unit Drawings

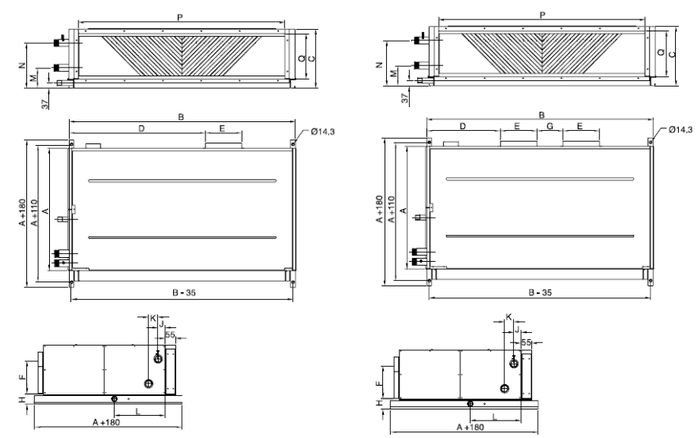

Note: The above applies to left hand unit.

Office Locations

Australia (Melbourne)
Tel: +61 (3) 9751 5000
Fax: +61 (3) 9755 7566

China (Shanghai)
Tel: +86 (21) 6276 6509
Fax: +86 (21) 6277 3543

Hong Kong
Tel: +852 2590 0012
Fax: +852 2516 5648

India (Mumbai)
Tel: +91 (22) 6683 7000
Fax: +91 (22) 6683 7002

Indonesia
Tel: +62 (21) 5366 8500
Fax: +61 (21) 5366 8300

Japan
Tel: +81 (3) 5738 6100
Fax: +81 (3) 5738 6298

Korea
Tel: +822 554 5935
Fax: +822 554 5739

Macau
Tel: +853 2875 1820
Fax: +853 2875 1825

Malaysia (Kuala Lumpur)
Tel: +60 (3) 7628 4300
Fax: +60 (3) 7874 1180

New Zealand
Tel: +64 (9) 444 6434
Fax: +64 (9) 444 2092

Singapore
Tel: +65 6748 0202
Fax: +65 6743 4420

Thailand (Bangkok)
Tel: +66 (2) 717 1260-80
Fax: +66 (2) 717 1325-8

Manufacturing/assembly: Guangzhou and Wuxi, China; Selangor, Malaysia PUBL-7893

YORK®
INSTALL CONFIDENCE

Johnson Controls